I-124 Radiolabeled Thyroid Hormone Action Studies in CNS with PET

Dr. Bao Teng, Dr. Haitao Wu and Colin M. Wilson

Imaging Probe Development Center, National Heart, Lung, and Blood Institute, National Institutes of Health, 9800 Medical Center Drive, Rockville, MD 20850, ipdc@nhlbi.nih.gov

Background

The thyroid hormones T3 and T4 (Figure 1), 3,3'-5-triiodothyronine and 3,3',5,5'-tetraiodothyronine (thyroxine), respectively, have essential functions, notably in the development of normal postnatal growth and in the proper functioning of the nervous system.[1] Thyroid hormone activities are mediated by thyroid hormone receptors (TRs), the expression of which are tissue-dependent and tightly regulated.[2] In animal models, mice totally devoid of TRs (TR double knockouts) exhibit a milder overall phenotype than one might expect given the debilitating symptoms of severe hypothyroidism seen clinically in patients.[3] I-124 radiolabeled thyroid hormones for PET imaging studies in animals should contribute to an understanding of the biodistribution and localization of the thyroid hormones during neonatal and postnatal development, while their use in the TR double knockout model should show whether thyroid hormone actions are also mediated non-genomically. Rodent studies will provide feasibility and dosimetry information that may lead to comparable studies in humans.

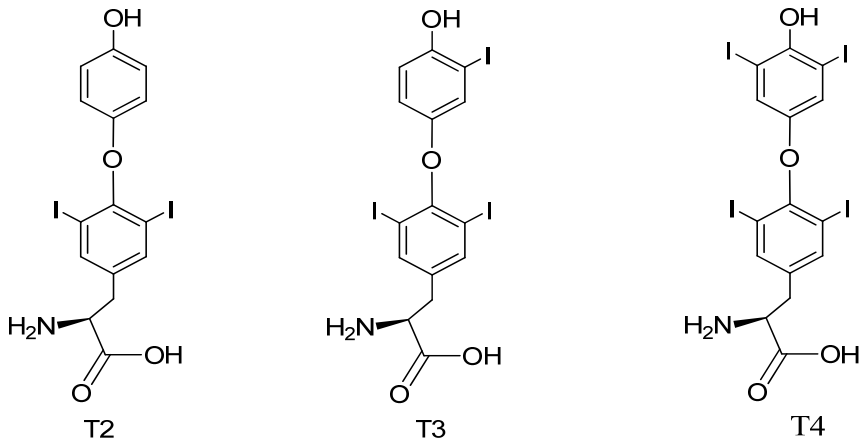

Figure 1. Molecular structures of T2, T3 and T4.

Chemistry

Prior to producing I-124 labeled thyroid hormone for PET imaging, we first explored synthetic methods and separation conditions using non-radioactive iodine and using the low energy gamma radionuclide, I-125. In these experiments, chloramine-T (CAT) was used as an oxidant in reactions with 3,3'-diiodo-L-thyronine (T2) and 3,3',5-triiodo-L-thyronine (T3) to obtain cold-iodine-labeled and I-125-labeled T3 and T4, respectively. The products were purified and analyzed by reverse-phase HPLC. In extending the work to I-124-labeled T3 we also included development of the radiolabeling process onto an automated radiolabeling system (Eckert & Ziegler, Berlin, Germany).

Scheme 1. Radiosyntheses of I-125-T3 and I-125-T4

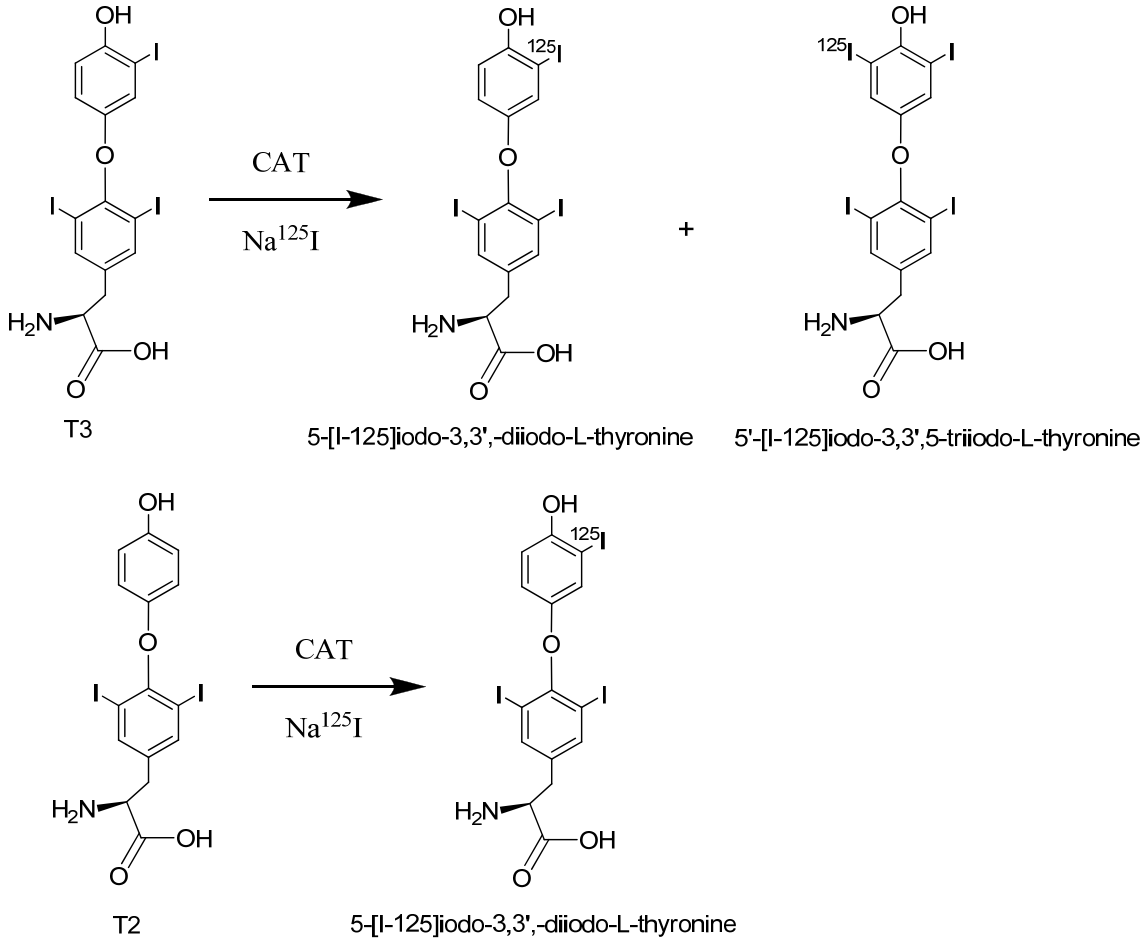

Scheme 2. HMI diagram for the production of I-124-T3 hormone .

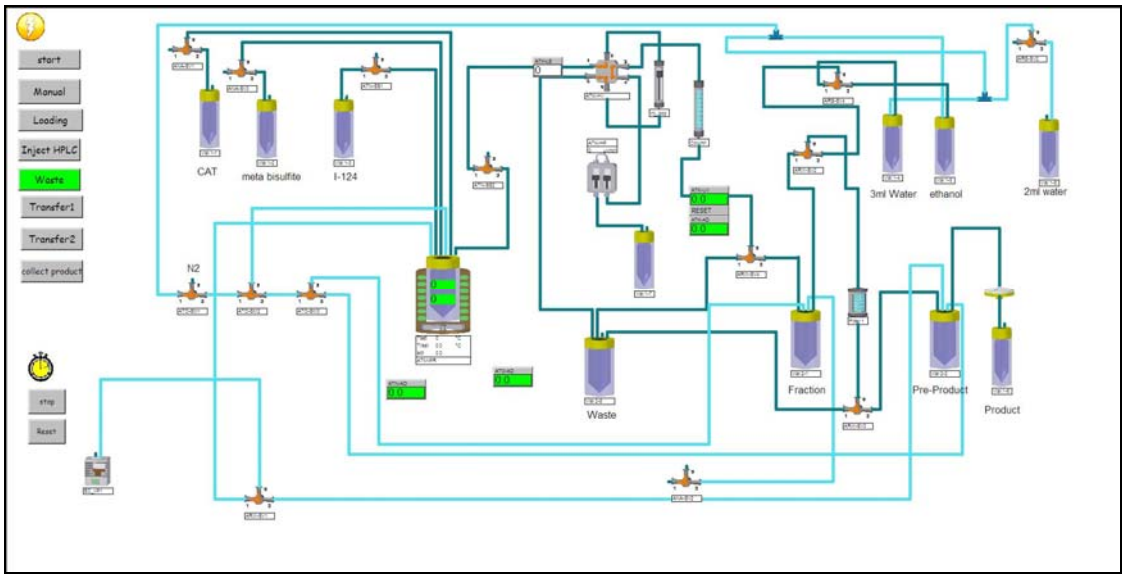

Experimental

General. All chemicals were purchased from Aldrich Chemical Company except where noted. Sodium [^{125}I]iodide (17.4 Ci/mg) in NaOH (1.0×10^{-5} M) was supplied by Perkin–Elmer Life and Analytical Science. High performance liquid chromatography was performed using a Beckman Gold HPLC system equipped with a Model 126 programmable solvent module, a Model 168 variable wavelength detector, a β–Ram Model 4 radioisotope detector, and Beckman System Gold remote interface module SS420X, using 32 Karat®software. HPLC was performed on a Waters Spherisorb ODS (2.5 µm, 250x4.6 mm) column.

Cold (non-radioactive) Labeling of T3 and T4. The non-radioactive iodination was performed by mixing 10 µL volumes of sodium iodide (2 µmol/mL in 0.05 mol/L sodium phosphate buffer pH7.5), 0.5 mol/L sodium phosphate buffer (pH7.5), T2 or T3(2 mg/mL in 0.05 mol/L sodium phosphate buffer, pH7.5) and CAT (1 mg/mL in 0.05 mol/L sodium phosphate buffer, pH7.5). The reaction was terminated after 1 minute by addition of 100 µL sodium bisulfite (1 mg/mL in 0.05 sodium phosphate buffer, pH7.5). Separation of the final product was performed on HPLC. Solvent A was 0.1% TFA in water, solvent B was 0.1% TFA in acetonitrile. A linear gradient of solvent B from 20-80% was used with a flow rate of 1mL/min.

I-125 Radiolabeling of T3 and T4. The radioiodinations of T3 and T4 were performed using CAT as oxidant (Scheme 1). 10 µL of T2 or T3 (2 µg/µL in 0.05 M sodium phosphate buffer, pH 7.5) was added to a v-bottomed vial. To this solution were added 0.5 M sodium phosphate buffer (70 µL, pH 7.5), CAT (10 µL, 1 µg/µL in 0.05 M sodium phosphate buffer pH 7.5) and sodium [^{125}I]iodide (10 µL in sodium hydroxide solution). The reaction mixture was mixed under vortex for 1 minute. To the mixed solution was added 100 µL sodium bisulfite (1 mg/mL in 0.05 M sodium phosphate buffer pH 7.5). The labeled product was purified by HPLC using the same methodology as used for non-radioactive compound. Quality control of the final product was performed using the same HPLC and linear gradient as above. I-125-T3 eluted at 17.4 minutes and I-125-T4 eluted at 20.5 minutes. Both radiochemical purities were over 98%. The specific activities of I-125-T3 and I-125-T4 were 3.35 Ci/mg and 2.81 Ci/mg, and the radiochemical yields for I-125-T3 and I-125-T4 were 24% and 25%, respectively. The stability of the two products was tested out to 72 hours post-labeling in the presence of three added excipients (Table 1).

Table 1. Stability of I-125-radiolabeled T3 and T4 in the presence of indicated amounts of potassium iodide, ascorbic acid and 2% bovine serum albumin.

Stability	T3 thyronine (%)			T4 thyronine (%)		
Time (hours)	KI 1mg/mL	Ascorbic acid 1mg/mL	BSA 2mg/mL	KI 1mg/mL	Ascorbic acid 1mg/mL	BSA 2mg/mL
24	14	75	93	34?	91	86
72	71	93	94	67	91	92

I-124-Radiolabeled T3 Using an Automated Synthesis. An Eckert & Ziegler modular system was configured as shown in Scheme 2. The reaction vial was sequentially charged with 100 µL of T2 solution (0.3 mg/mL in DMSO), sodium (^{124}I) iodide solution (4 mCi) in 150 µL of 50 mM sodium phosphate buffer, pH 7.5, and 100 µL of CAT (1 mg/mL in 50 mM sodium phosphate buffer, pH 7.5). The reaction mixture was stirred for 1 minute and 100 µL of sodium metabisulfite (1 mg/mL) was added to stop the reaction, which was then stirred for an additional minute. The mixture was loaded onto a HPLC loop and eluted with 30% ethanol in water (isocratic). The

desired product was collected into a vial containing 5 mL of water for dilution purposes in order to enable ready Sep-Pak removal of acetonitrile. The aqueous product solution was adsorbed onto a Sep-Pak C18 cartridge (Waters, WAT020515), which was washed with an additional 3 mL of water. The I-124-T3 was eluted with 1 mL of ethanol and subsequently removed under vacuum. The residue was taken up in 3 mL of water and passed through a 0.22 micron filter. It was analyzed on a Beckman-Coulter HPLC (Figure 2) using an Eclipse XDB-C18 column (3.5µm, 3x150mm) with a gradient of solvent A (0.1% TFA in water) to solvent B (0.1% TFA in acetonitrile) of 30-70% over 13 minutes. I-124-T3 eluted at 5.6min with a radiochemical purity of more than 98%. The radiochemical yield was 26.8%.

Figure 2. HPLC trace I-124-labeled T3.

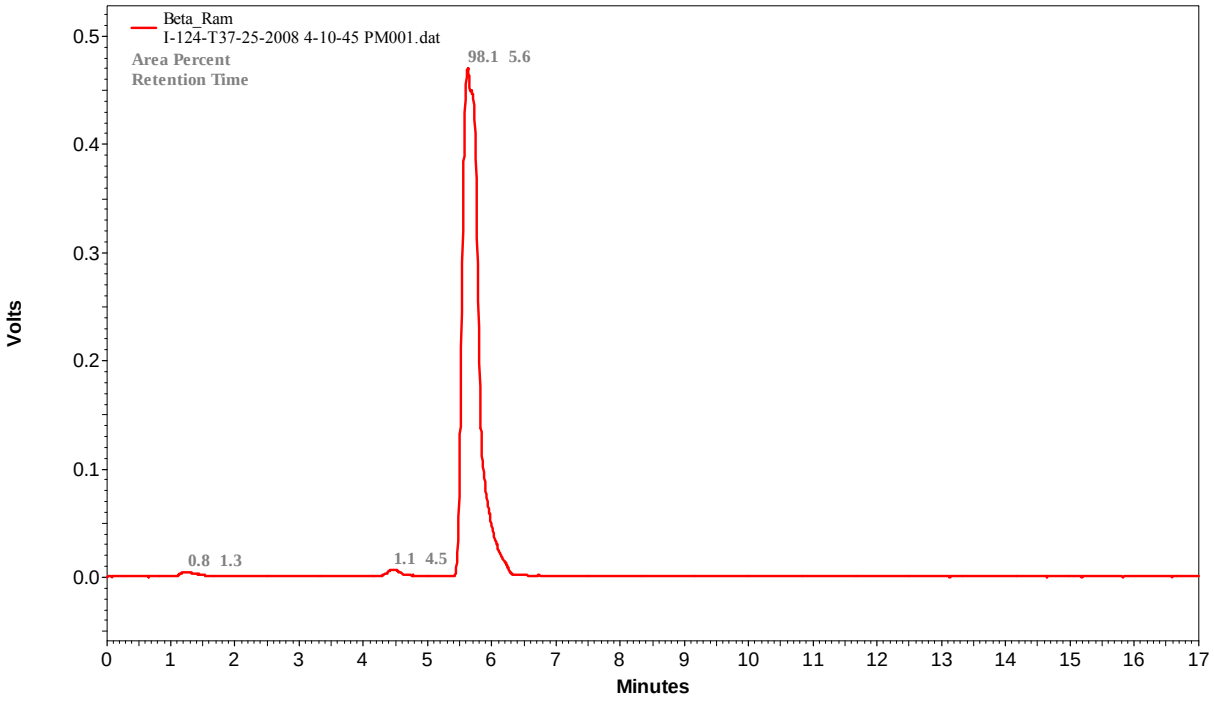

References

1. Oppenheimer JH and Schwartz HL. Molecular basis of thyroid hormone-dependent brain development. Endocr Rev. 1997 Aug;18(4): 462-75. PMID 9267760

2. Yen PM. Physiological and molecular basis of thyroid hormone action. Physiol Rev. 2001 Jul;81(3): 1097-142. PMID 11427693

3. Gothe S, Wang Z, Ng L, Kindblom JM, Barros AC, Ohlsson C, Vennstrom B and Forrest D. Mice devoid of all known thyroid hormone receptors are viable but exhibit disorders of the pituitary-thyroid axis, growth, and bone maturation. Genes Dev. 1999 May 15;13(10): 1329-41. PMID 10346821